BATHROOMWARE
FOR REAL KIWIS
Raymor

WALL BASINS

Raymor wall basins are ideal for the minimalist, increasingly popular in contemporary bathroom design.

With a flat edge design and styling ensuring the right balance between shape and form.

RUBY ROUND
(7)567915

W 360mm, L 375mm, H 150mm

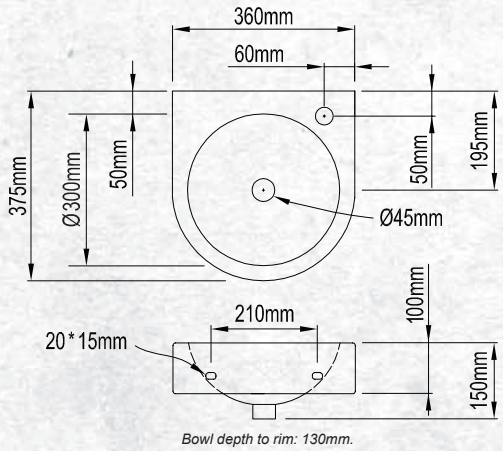

FEATURES

Full vitreous china wall basin, single tap hole (right side only), no overflow. Comes with fittings.

WASTES, TAPWARE AND ACCESSORIES NOT INCLUDED

PlaceMakers®
www.placemakers.co.nz

mico
The bathroom specialist
www.mico.co.nz